PANEL	VOLTAGE	TYPE	MOUNTING	MAINS	
HOUSE(HP)	120–208	MLO	WALL	225A.	42 POLE

PHASE	WIRE SIZE	SYSTEM	AMPS PER PHASE	PHASE A	PHASE B	PHASE C
3PH,	4 #4/0 CU	WYE				
			KVA TOTAL –	PHASE A	PHASE B	PHASE C

DESCRIPTION	PHASE LOADS A	B	C	WIRE	BRKR	CIRCUIT	"A" "B" "C"	CIRCUIT	BRKR	WIRE	PHASE LOADS A	B	C	DESCRIPTION
YARD SIGN	1500			12	20	1		2	20	12	150			SOFFIT LIGHTS
EXTERIOR LIGHTS		400		12	20	3		4				150		
			400			5		6	20	12			825	WALL PACKS
EXTERIOR LIGHTS	400			12	20	7		8			825			
		400				9		10	20	12		900		EXT. RECEPT.
						11		12						
						13		14						
						15		16						
						17		18						
						19		20						
						21		22						
						23		24						
						25		26						
						27		28						
						29		30						
						31		32						
						33		34						
						35		36						
						37		38						
						39		40						
						41		42						
	1900	800	400								975	1050	825	

PANEL	VOLTAGE	TYPE	MOUNTING	MAINS	
1200 S.F.TENANT	120–208	MLO	WALL	225A. 400A. (UNIT 1)	42 POLE

PHASE	WIRE SIZE	SYSTEM	AMPS PER PHASE	PHASE A	PHASE B	PHASE C
3PH,	4 #4/0 CU 4 – 500 MCM (UNIT 1)	WYE				
			KVA TOTAL –	PHASE A	PHASE B	PHASE C

DESCRIPTION	PHASE LOADS A	B	C	WIRE	BRKR	CIRCUIT	"A" "B" "C"	CIRCUIT	BRKR	WIRE	PHASE LOADS A	B	C	DESCRIPTION
A.H.U.	1500			12	20	1		2	30	10	3120			A.C.C.U.
WORK LIGHT		100		12	20	3		4				3120		
RECEPT.			180	12	20	5		6	20	10			1792	LIGHTS
RECEPT.	180			12	20	7		8	20	12	180			RECEPT.
RECEPT.		180		12	20	9		10	20	12		180		RECEPT.
RECEPT.			360	12	20	11		12						
						13		14						
						15		16						
						17		18						
						19		20						
						21		22						
						23		24						
						25		26						
						27		28						
						29		30						
						31		32						
						33		34						
						35		36						
						37		38						
						39		40						
						41		42						
	1680	280	540								3300	3300	1792	

ELECTRICAL WORK NOTES

A. ALL ELECTRICAL WORK SHALL BE IN COMPLIANCE WITH ALL NATIONAL, STATE AND LOCAL CODES, ORDINANCES AND HEALTH REGULATIONS AND WITH THE NATIONAL ELECTRICAL CODES: ANY MODIFICATIONS AND/OR ADDITIONS TO THESE PLANS REQUIRED FOR PROPER COMPLIANCE TO ANY APPLICABLE CODES SHALL BE THE RESPONSIBILITY OF THE CONTRACTOR AND SHALL BE INCLUDED IN HIS ORIGINAL QUOTE.

B. THE ELECTRICAL CONTRACTOR SHALL COORDINATE UTILITY RUNS WITH TRADES.

C. FURNISH AND INSTALL LIGHT FIXTURES, WIRING, DEVICES, PANELS, BREAKERS, RELAYS, ETC. AS REQUIRED. WHERE AN ELECTRICAL DEVICE AND/OR DISCONNECT SWITCH IS REQUIRED BY CODE BUT NOT SHOWN, IT SHALL BE FURNISHED AND INSTALLED BY THE ELECTRICAL CONTRACTOR AS THOUGH FULLY SHOWN AND SPECIFIED. THE ELECTRICAL CONTRACTOR SHALL PROVIDE SHOP DRAWINGS FOR THE EQUIPMENT HE SUPPLIES.

D. DEVICES SHALL BE HUBBEL 1221 SWITCHES, 5252 OUTLETS AND 98000 SERVICE PLATES.

E. CONDUIT PIPING SHALL BE CONCEALED UNDER FLOOR, ABOVE CEILING,OR INSIDE WALLS. CONDUITS INSTALLED INDOORS SHALL BE 1/2" MINIMUM EMT. CONDUITS INSTALLED UNDERGROUND SHALL BE 3/4" MINIMUM RIGID HEAVY WALL. CONDUITS INSTALLED OUTDOORS SHALL BE 3/4" MINIMUM RIGID HEAVY WALL. THE ELECTRICAL CONTRACTOR SHALL PROVIDE CONDUIT SUPPORTS FOR ALL CONDUITS. ALL ELBOWS SHALL BE HEAVY WALL STEEL.

F. THE MINIMUM SIZE OF WIRE SHALL BE #12 AWG THHN. WIRES INSTALLED UNDERGROUND OR OUTDOORS SHALL BE THW. ALL HOME RUNS OF 75 FEET AND LONGER SHALL BE #10 AWG.

G. LIGHTING FIXTURES SHALL BE AS NOTED ON THE SCHEDULE AND BE COMPLETE WITH LAMPS, LENSES, HANGERS, FRAMES, STARTERS, BALLASTS, ETC. INSTALL ALL LIGHTING FIXTURES AS INDICATED ON PLANS. ALL LIGHTING FIXTURES SHALL BE FURNISHED WITH A U.L. LABEL.

H. RUN CONDUIT AND WIRE TO EACH OUTLET AND PIECE OF EQUIPMENT, MAKE ALL ELECTRICAL CONNECTIONS, OPERATE AND TEST THE SYSTEMS. REFER TO DRAWINGS FOR EXTENT OF WORK TO BE PERFORMED BY OWNER.

I. THE ELECTRICAL CONTRACTOR SHALL INSTALL CIRCUIT DIRECTORY WITH TYPED CIRCUIT DESIGNATION CARD UNDER PLASTIC ON THE INSIDE OF EACH PANELBOARD DOOR.

J. HVAC UNIT FEEDERS AND DISCONNECT SWITCH SIZES ARE BASED ON EQUIPMENT. REFER TO HVAC DRAWINGS AND PUBLISHED INFORMATION. THE ELECTRICAL CONTRACTOR SHALL FIELD VERIFY EXACT REQUIREMENTS.

K. THE ELECTRICAL CONTRACTOR SHALL INSTALL #14 PULL WIRE IN ALL EMPTY CONDUITS.

L. ALL EXIT SIGNS AND BATTERY UNITS SHALL CONFORM TO THE LATEST LOCAL ELECTRICAL CODE.

M. THE ELECTRICAL CONTRACTOR SHALL SUPPLY ANY TEMPORARY ELECTRICAL SERVICES REQUIRED DURING THE ENTIRE PERIOD OF CONSTRUCTION IF SO REQUIRED AND/OR DIRECTED BY THE OWNER, THE CONSTRUCTION DOCUMENTS OR SPECIFICATIONS.

N. ELECTRICAL CONTRACTOR SHALL INSTALL BINDING JUMPER AROUND WATER METER.

O. EQUIPMENT, MATERIALS AND WORKMANSHIP SHALL BE FREE OF DEFECTS FOR ONE YEAR AFTER FINAL ACCEPTANCE.

P. METERING FOR NEW SERVICE SHALL BE PROVIDED AS PER UTILITY COMPANY REQUIREMENTS.

Q. PROVIDE A GREEN GROUND CONDUCTOR FOR ALL BRANCH CIRCUITS.

R. ALL CONDUITS RUNNING FROM OUTSIDE OF BUILDING INTO BUILDING TO HAVE APPROVED SEALOFFS.

ALL WIRE IS TO BE 90° THHN UNLESS REQUIRED OTHERWISE BY CODE.

ELECTRICAL CONTRACTOR SHALL OBTAIN AND PAY FOR ALL PERMITS PERTAINING TO ELECTRICAL WORK.

THE ELECTRICAL CONTRACTOR SHALL PROVIDE, FURNISH, AND INSTALL ALL REQUIRED CONTROL WIRING, LOW VOLTAGE SYSTEMS, DISCONNECTS, AUXILIARY CONTACTS, CONTROL DEVICES, ETC. FOR A COMPLETE OPERATIONAL ELECTRICAL SYSTEM. ALL SMOKE ALARMS, DETECTORS, FIRE ALARM SYSTEMS, DOORBELLS, EXIT SIGNS, BATTERY PACKS, AND OTHER MISC. LOW VOLTAGE SYSTEMS SHALL BE PROVIDED AND INSTALLED BY THE ELECTRICAL CONTRACTOR UNLESS SPECIFIED OTHERWISE IN THESE DOCUMENTS.

TELEPHONE SYSTEM PRE–WIRING IS BY ELECTRICAL CONTRACTOR. ELECTRICAL CONTRACTOR SHALL PROVIDE AND INSTALL A PLYWOOD TELEPHONE PANEL BOARD AT LOCATION TO BE SPECIFIED BY OWNER. ELECTRICAL CONTRACTOR TO PROVIDE A 4 INCH DIAMETER SCH. 40 PVC SLEEVE FROM STREET TO BE STUBBED UP INSIDE BUILDING BELOW TELEPHONE PANELBOARD. LEAVE PULL WIRE IN CONDUIT. CONDUIT TO BE BURIED A MINIMUM OF 24" DEEP IN GROUND AT YARD. (VERIFY EXACT TELEPHONE PRE–WIRE INSTRUCTIONS WITH PHONE CO.)

OPENINGS FOR OUTLETS IN MASONRY WALLS TO BE LARGE ENOUGH AND HAVE A FLAT SURFACE OF MORTAR SO THAT DEVICE PLATES FIT FLUSH TO WALL.

CENTER LINE OF ALL DUPLEX RECEPTACLES TO BE 18" A.F.F. UNLESS NOTED OTHERWISE.

ALL HVAC UNITS AND REFRIGERATION UNITS TO HAVE A MINIMUM POWER FACTOR (UNIT) OF #.85.

ALL EXTERIOR W.P. OUTLETS TO HAVE A GROUND FAULT INTER–RUPTER (G.F.I.) CIRCUIT BREAKER TO BE LOCATED WITHIN THE OUTLET BOX WITH A FRONT FACE PUSH–BUTTON RESET.

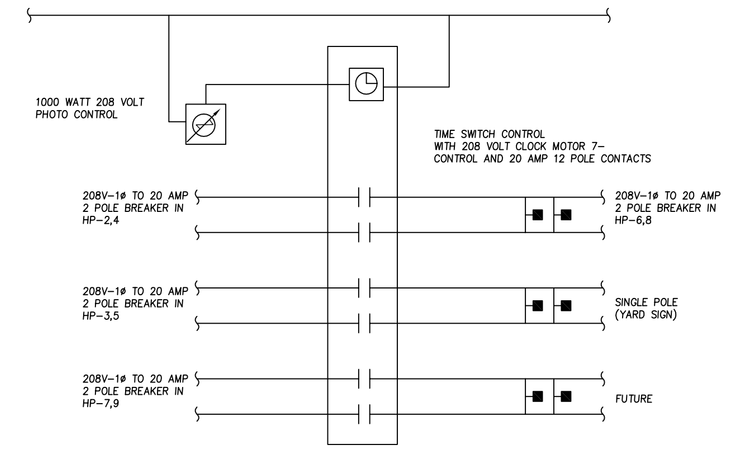

EXTERIOR LIGHTING CONTACTOR

NO SCALE

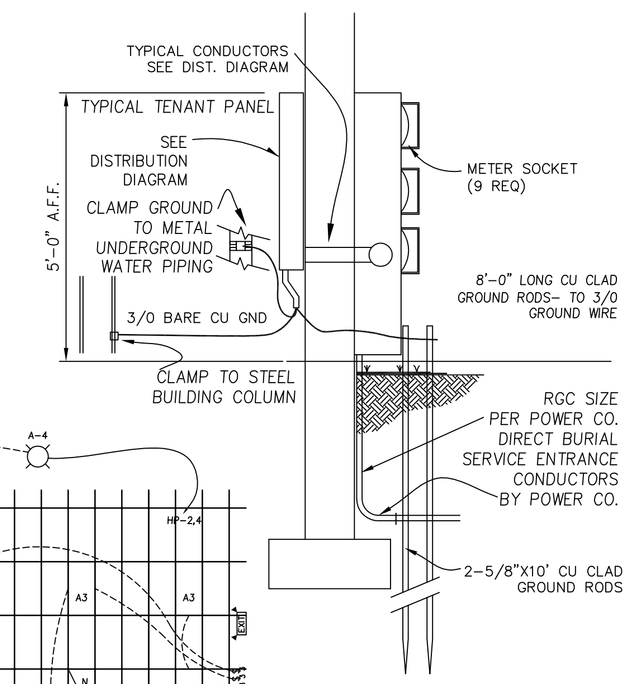

SERVICE ENTRANCE

NO SCALE

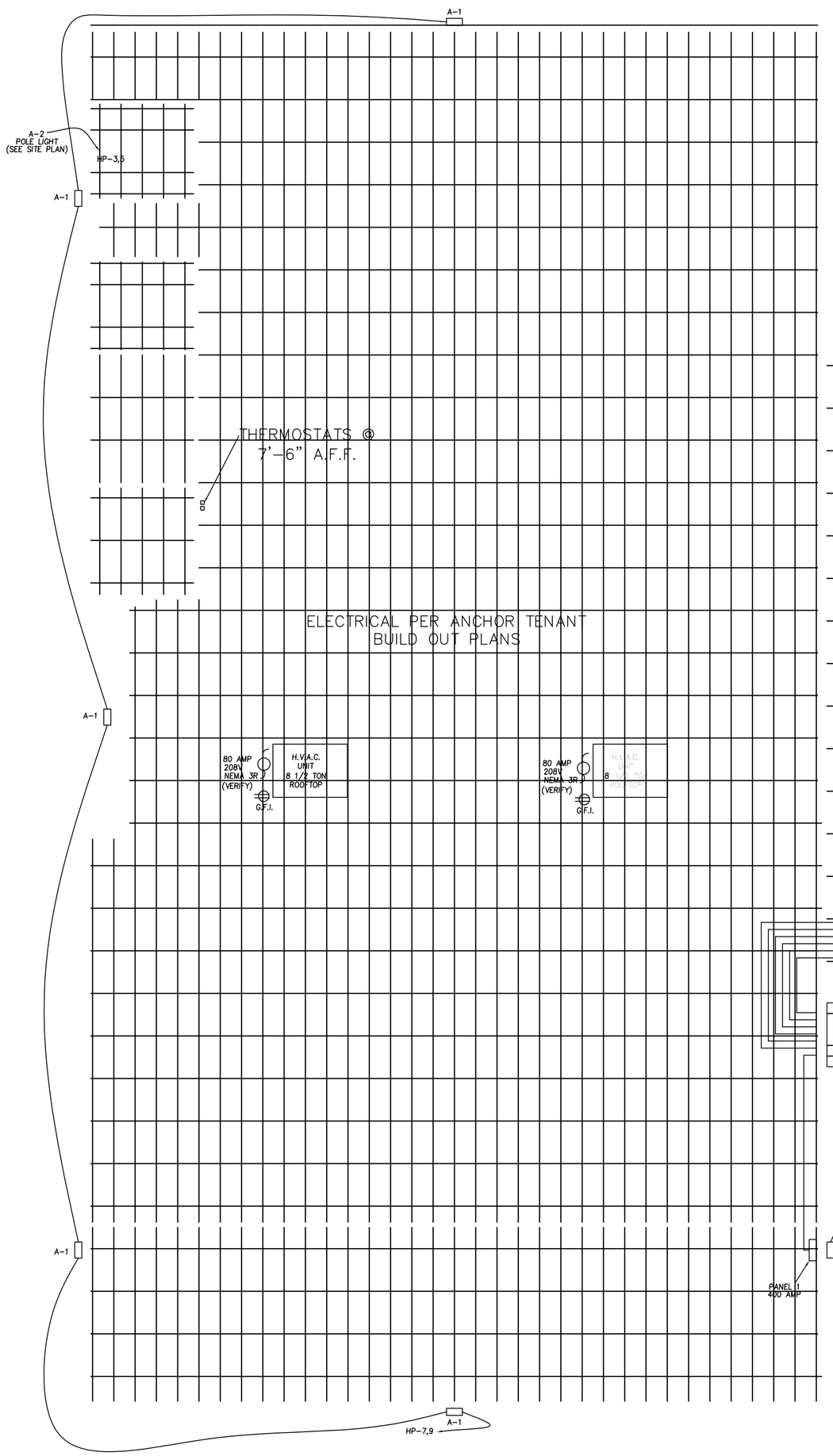

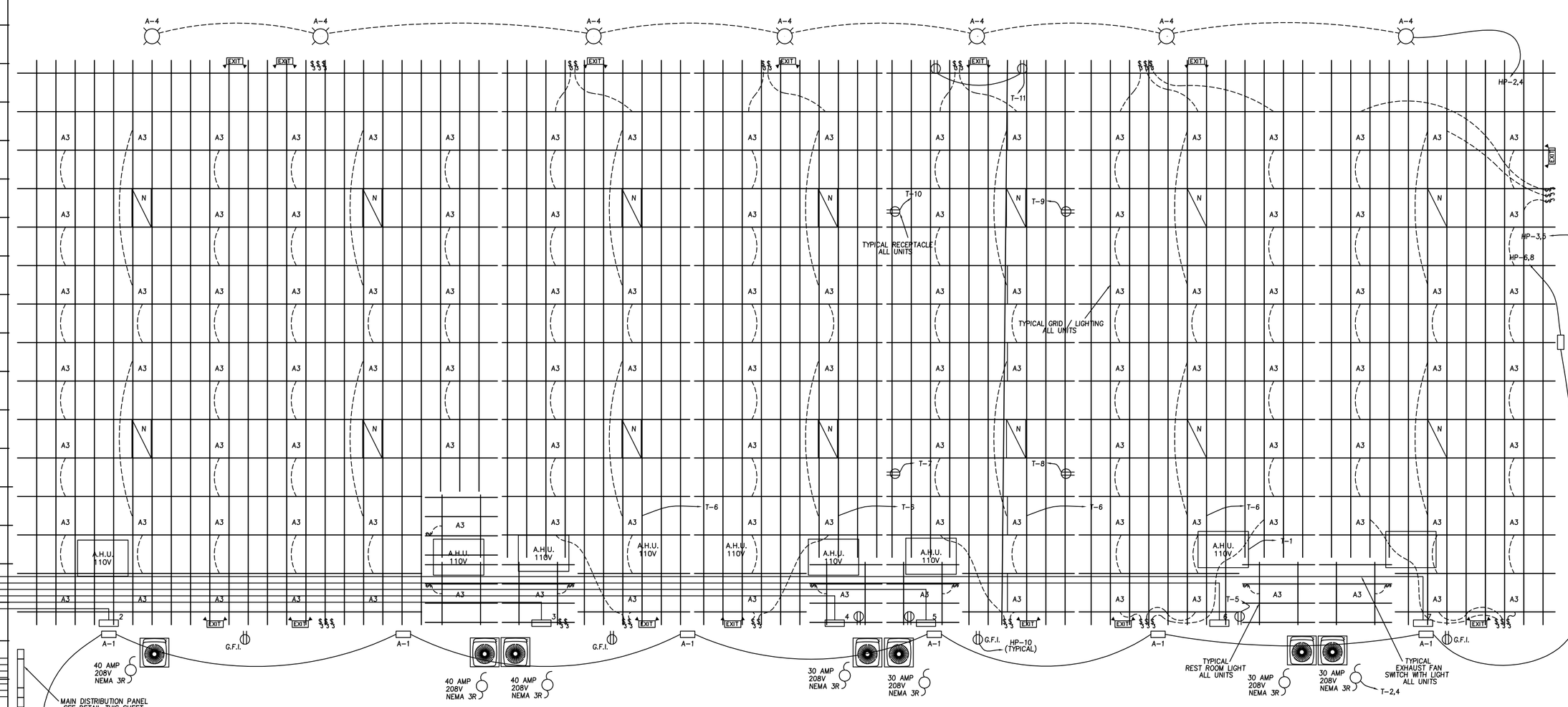

PLAN

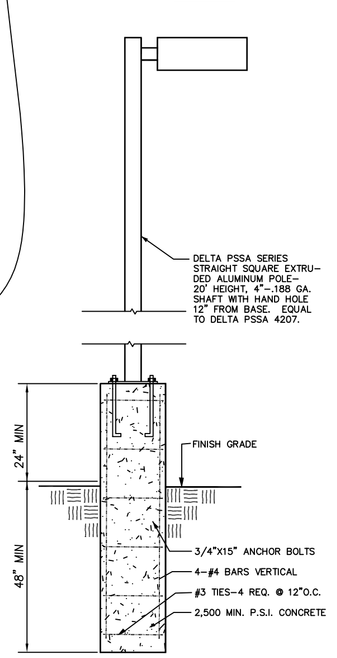

LIGHT POLE DETAIL

SCALE: NONE

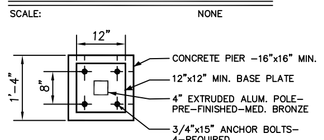

PLAN

LIGHT FIXTURE SCHEDULE

TYPE	MANUFACTURER	CATALOG NO.	DESCRIPTION	MOUNTING	LAMPS	VOLTS	SIZE
A1	METALUX LITHONIA	CS7162–9–F–CA14 KAD150M–R3–TB–SPD04–SF	EXTERIOR WALL MOUNT	WALL	(1) 150W MH	120	–
A2	HUBBLE	MSV–A1000H–VWB–1–L	SINGLE POLE MOUNT FIXTURE PROVIDE 22.5' POLE	POLE	(1) 400W MH	208	–
A3	2' X 4' FLUORESCENT	SEE OWNER		CEILING		110	–
A4	HALO	M7600T–620	HID DOWN LIGHT RECESSED	RECESSED	(1) 50W M.M.	110	–
(C) A	A = 8' LIGHT FIXTURES– LITHONIA MODEL NO. TC–1–32–120–OSISP WITH SYLVANIA BRAND BALLAST (NO. QT2X32PLUS), AND TUBES (NO. F032/841XPEECO)						

④ PROVIDE TELEPHONE BACKBOARD WITH (1) 2" CONDUIT UNDERGROUND FOR TELEPHONE SERVICE PER SUITE.

ELECTRICAL PLAN

SCALE: 1/8" = 1'–0"

NORTH

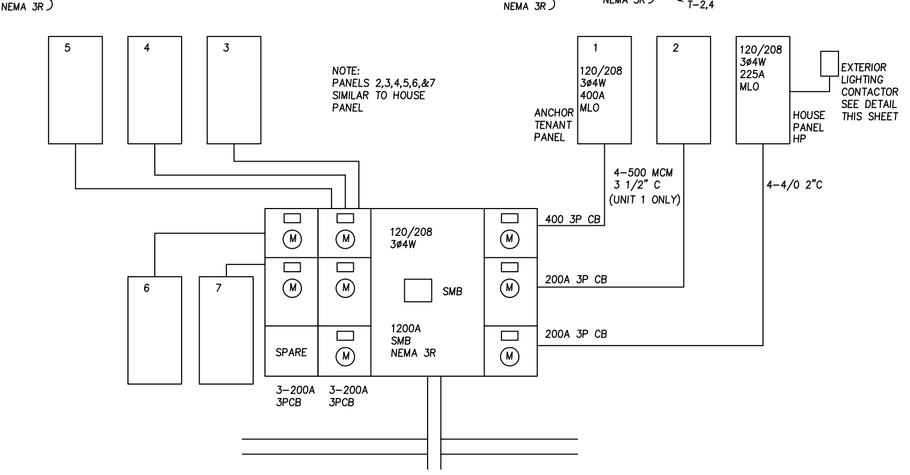

DISTRIBUTION DIAGRAM

NO SCALE

0560EC1

ELECTRICAL PLAN